LONG NECK

Twist-Off 0.330



KMC
GLASS

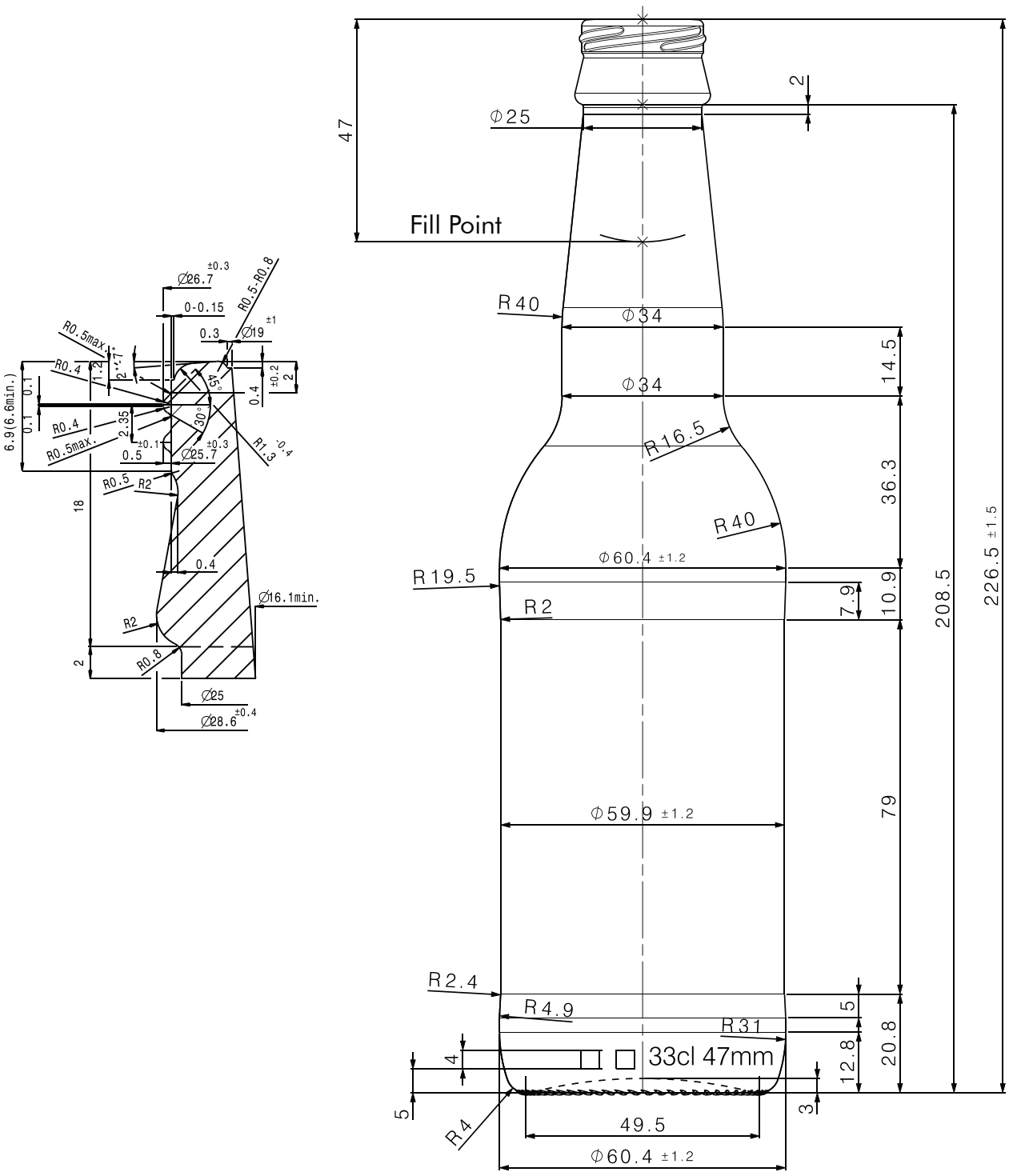

- Long Neck Twist-Off
- Filling CAP - 330 ml
- Weight - 223 g
- Height - 226.5 mm
- Diameter - 60.4 mm
- Finish - 26 Twist Crown 3
- Color - Green, Flint, Amber

www.kmc.glass
sales@kmc.glass

KMC GLASS